Lunar In Situ Resource Utilization

Gerald B. Sanders, *Johnson Space Center*
William E. Larson, *Kennedy Space Center*
Kurt R. Sacksteder, *Glenn Research Center*
Carole Mclemore, *Marshall Space Flight Center*
Kenneth Johnson, *Jet Propulsion Laboratory*

Instead of bringing everything from Earth, a key to fulfilling the goal of sustained and affordable human and robotic exploration will be the ability to use resources that are available at the site of exploration to "live off the land," known as In Situ Resource Utilization (ISRU). By producing propellants, life support and fuel cell power consumables, and other items from in situ resources, and by eliminating the need to launch everything from the Earth's surface, long-term launch and mission costs can be reduced while potentially increasing science and exploration capabilities and mission safety. The Exploration Systems Architecture Study, conducted in 2004, identified three critical areas of lunar ISRU that could provide significant benefits to future robotic and human exploration of the Moon. The three main areas were: 1) lunar regolith excavation, handling, and material transportation; 2) oxygen extraction from regolith (and eventually other products of interest such as metals and silicon); and 3) lunar volatile resource characterization extraction, separation, and storage, especially in the permanently shadowed craters at the lunar poles. In 2006, the ISRU Project was initiated under the Exploration Technology Development Program (ETDP) to develop technologies and systems for these three areas of lunar ISRU so that they would be ready for incorporation into future human lunar missions as early as 2018. To ensure that technology and system development was properly coordinated among these three areas and with other projects within ETDP, such as Surface Mobility, Surface Power, Life Support, and Propulsion, a fourth area – ISRU System Engineering, Environments, Integration, and Testing (SEEIT) – was also established.

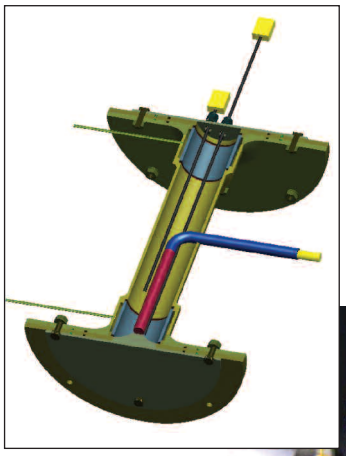

The lunar regolith excavation, handling, and material transportation area, led by the Glenn Research Center (GRC) with support from Kennedy Space Center (KSC) and Jet Propulsion Laboratory (JPL), deals with all aspects of lunar regolith handling for site preparation, resource collection, and site construction activities. Design drivers are derived from lunar exploration architecture specified production and excavation rates for potential applications, which include: oxygen production using chemical reduction of regolith (reduction process dependent); polar volatile extraction (especially polar hydrogen/water); solar wind volatile extraction (anywhere); and preparation of lunar surface features and construction (e.g., nuclear reactor emplacement/burying/shielding). Work is focused on developing computer models to predict excavation and lunar regolith properties, procuring and using soil mechanics and granular media flow and excavation measurement instruments to create soil bins for excavation performance testing, recreating a Surveyor III arm/scoop to compare terrestrial with Apollo lunar missions (1960s) data, and initiating internal and external excavation hardware design and test efforts to begin evaluation of different excavation concepts. Early results from modeling efforts predict that small rovers (100 to 200 kg) may be adequate for most early lunar excavation and material transport needs.

The oxygen extraction from lunar regolith area, led by KSC with support from Johnson Space Center (JSC) and GRC, consists of receiving regolith from excavation and material transportation and chemically, electrically, and/or thermally extracting oxygen from the metal and nonmetal

JSC Hydrogen Reduction Fluidized Reactor.

Lunar In Situ Resource Utilization
continued

compounds in lunar regolith. Other resources of interest, such as silicon, iron, titanium, aluminum, etc., may also be processed in the future based on technologies developed for oxygen production. A significant number of processes were previously proposed. For the ISRU Project, three selected processes span the range of low risk/low yield to high risk/high yield. The processes under development are: hydrogen reduction of regolith; carbothermal reduction from regolith; and molten electrolysis.

Lockheed Martin Astronautics (LMA) and JSC lead two separate regolith processing reactor design efforts for hydrogen reduction or regolith. LMA is designing and testing a rotating reactor with a single inlet/outlet port, and JSC is designing a fluidized bed with separate inlet/outlet ports. Orbital Technology Corporation (ORBITEC) and Pioneer Astronautics are designing and testing two different carbothermal reduction methods using methane and carbon dioxide as the reacting media, respectively. KSC and Marshall Space Flight Center (MSFC), in partnership with the Massachusetts Institute of Technology and the Florida Institute of Technology, are initiating research into electrodes, reactor materials, and cell designs for molten oxide electrolysis (MOE) of regolith.

Small-scale laboratory testbeds were built and tested for both hydrogen reduction and carbothermal reduction, and simple cell and electrode tests were performed for MOE. Design for 250 to 1,000 kg of oxygen per year production reactors is underway for hydrogen and carbothermal

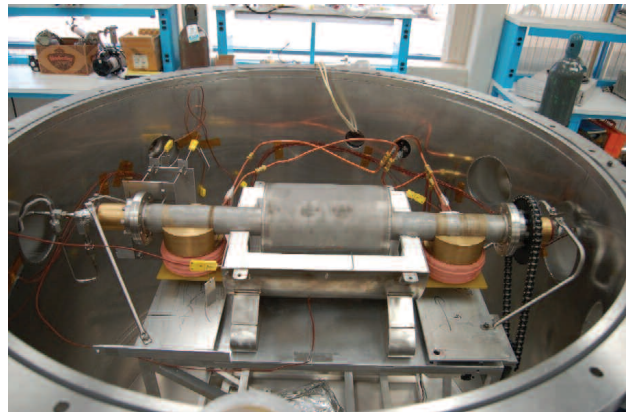

LMA Hydrogen Reduction Kinetic Reactor.

reduction with end-to-end testing of the hydrogen reduction reactor scheduled for the end of 2008. Because extraction of oxygen from regolith is a high-temperature process (>900°C for hydrogen reduction and 1,600°C for carbothermal reduction), development and incorporation of solar concentrators is of interest in reducing electrical power needs. Evaluation of two concepts is just beginning. Physical Sciences Inc., under Small Business Innovative Research contracts, is examining the use of fiber optics to direct light from solar concentrators. GRC, with support from MSFC, is evaluating direct focusing of light from concentrators into reactors.

The lunar volatile characterization, extraction, separation, and collection area, led by JSC with support from KSC, GRC, and JPL, consists of all aspects of locating and characterizing lunar resources (especially polar hydrogen/water), drilling and excavating regolith in the permanently shadowed craters; thermal, chemical, and/or electrical processing this regolith to release volatiles; identifying/quantifying all volatiles; and separating and collecting volatiles of interest (including hydrogen, water, nitrogen, methane, and ammonia).

The Lunar Prospector mission found evidence of elevated hydrogen at the lunar poles, and measurements made at

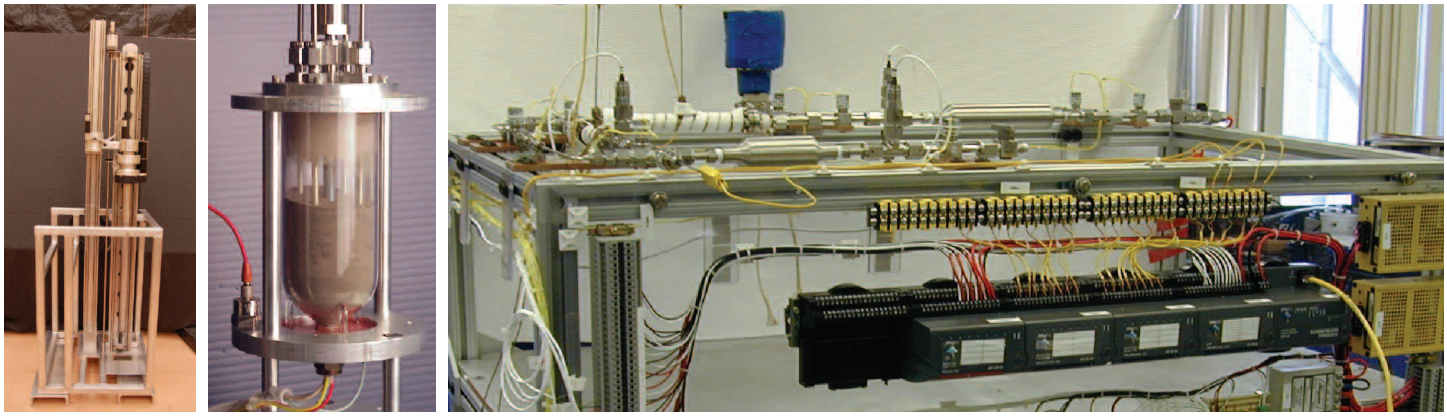

RESOLVE first-generation Engineering Breadboard Unit (EBU) hardware.

these locations from the Clementine mission bistatic radar have been interpreted as correlating to water/ice concentrations. However, there is considerable scientific debate on the form and concentration of this hydrogen since the orbiting satellites had limited resolution and their data can be interpreted in different ways.

Development of the Regolith and Environment Science and Oxygen and Lunar Volatile Extraction (RESOLVE) experiment package, initiated in 2005, supported lunar robotic precursor missions that could be flown to the rim or into a permanently shadowed crater with the objective of answering these questions surrounding elevated hydrogen at the lunar poles: What is it? How much is there? How deep or distributed is it? To do this, a drill takes a core sample at least 1 meter deep, crushes and heats sample segments from the core in an oven, and monitors the amount and type of volatile gases that evolve with a gas chromatograph (GC) as the sample rises in temperature. RESOLVE also selectively captures both hydrogen gas and water as a secondary method of quantification. A specialized camera that is coupled with a Raman spectrometer allows core samples to be microscopically examined while also determining their mineral composition and possible water content before heating. Also, RESOLVE is aimed at demonstrating capabilities and techniques that might be later used for ISRU, a large multiuse oven is also incorporated that will introduce known quantities of hydrogen at elevated temperatures to demonstrate a method for extracting oxygen from lunar regolith.

The drill and crusher are under development by the Northern Centre for Advanced Technology; the oven, GC, and hydrogen/water capture devices are under development by KSC and GRC; and the integrated camera/Raman spectrometer is under development by JPL. JSC is developing the regolith oxygen extraction unit, and it is also integrating all of the RESOLVE parts into a complete package. A field demonstration of the RESOLVE drill on a rover is scheduled for early 2008, following a test on the first-generation EBU for RESOLVE. A complete second-generation RESOLVE EBU on a more capable rover is planned for the end of 2008.
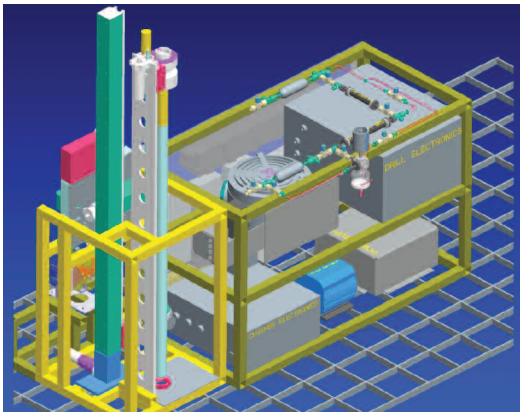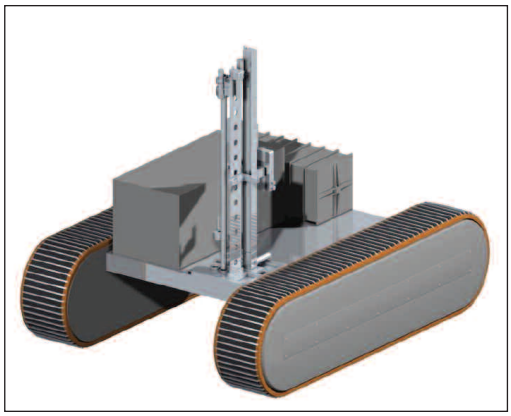
Lastly, the ISRU SEEIT effort, led by JSC with support from all participating NASA centers, involves the following: system and ISRU element modeling; development and management of lunar simulants for ISRU and other project usage; development of lunar environment simulation capabilities and facilities; and ISRU interfaces and integrated demonstrations. MSFC is leading the development of lunar simulants with support from JSC. Since previously developed lunar simulant JSC-1 is no longer available, MSFC and ORBITEC have initiated manufacture and characterization of a new simulant based on the original specifications for JSC-1. The new simulant, known as JSC-1a, is being distributed for use and can be obtained in three different versions: fines; normal; and bulk. Because NASA recently announced interest in establishing an outpost at a lunar pole, MSFC – in collaboration with the U.S. Geological Survey – is developing a new highland lunar regolith simulant. Manufacture and characterization of possible glasses and agglutinates for incorporation into the new highland lunar simulant are also under evaluation. Low-rate production in 2008 will be possible, following the distribution of an early prototype of the new simulant.