Viewing and Imaging Ignition and Combustion Events in High-Pressure Systems

Susana A. Harper,
White Sands Test Facility, Johnson Space Center

Timothy Gallus,
White Sands Test Facility, Johnson Space Center

Fingerprint oil films were tested for ignition and combustion at rapid pressurization impact at White Sands Test Facility (WSTF). The tests were in accordance with NASA-STD-6001 Test 14, comparable to ASTM Standard Test Method for Ignition Sensitivity of Materials to Gaseous Fluid Impact (G 74). However, to meet the challenges of detecting ignition at rapid pressurization, the high-pressure chamber was modified to include a viewing and imaging system. This paper discusses the design changes, and how similar configurations can be adapted to meet other imaging challenges for ignition and combustion testing.

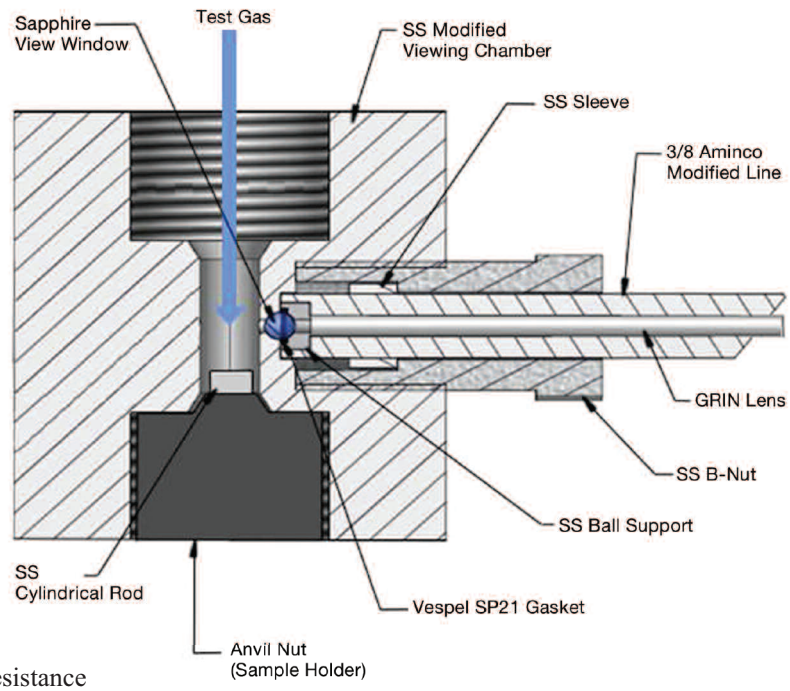

Fig. 1. High-pressure impact viewing chamber with viewing system assembly.

The test chamber was designed with a side viewing port to record video data through a sapphire ball window. Sapphire is commonly used for sight glass and viewing window applications due to its high clarity, low-distortion image transfer, and temperature resistance properties. A ball configuration gives sapphire geometric advantages of increased strength under high forces and a large field of view. Although spherical lenses can capture a wider scope than traditional lens windows, they create images with fish-eye-view distortion.

The sapphire ball window installed at WSTF included a high-pressure fitting designed to seal a maximum pressure of 69 megapascal (figure 1). Due to the hardness of sapphire, low-pressure sealing can be achieved against a 316 SS body from torque alone; but to seal against high pressures, a good soft seal was necessary. Vespel SP21 was chosen for its oxygen-compatibility properties (oxygen index of 53% and autogenous ignition temperature of 343°C). A ball support was designed to contain approximately half the sapphire ball and the custom Vespel SP21 gasket. At high test pressures, the ball is pushed into the gasket, forming a seal between the sapphire ball, gasket, and SS ball support. Because sapphire is vulnerable to point-loading fracture, the main body of the viewing chamber and the SS ball support were designed with "footprints" (figure 2) to distribute forces and reduce point loading around the sapphire ball.

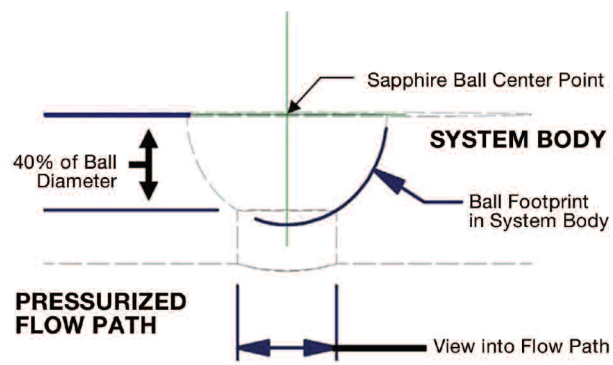

Fig. 2. Point load reduction sapphire ball footprint in system body.

To withstand the high pressures, only about 10% of the 4-mm-diameter sapphire ball could protrude into the viewing chamber. To safely obtain images of the combustion, the flame/light was imaged through the sapphire ball and transferred through an adjacent gradient index (GRIN) lens to the external recording devices. GRIN lenses, forming the heart of a rigid borescope, transfer images by folding them

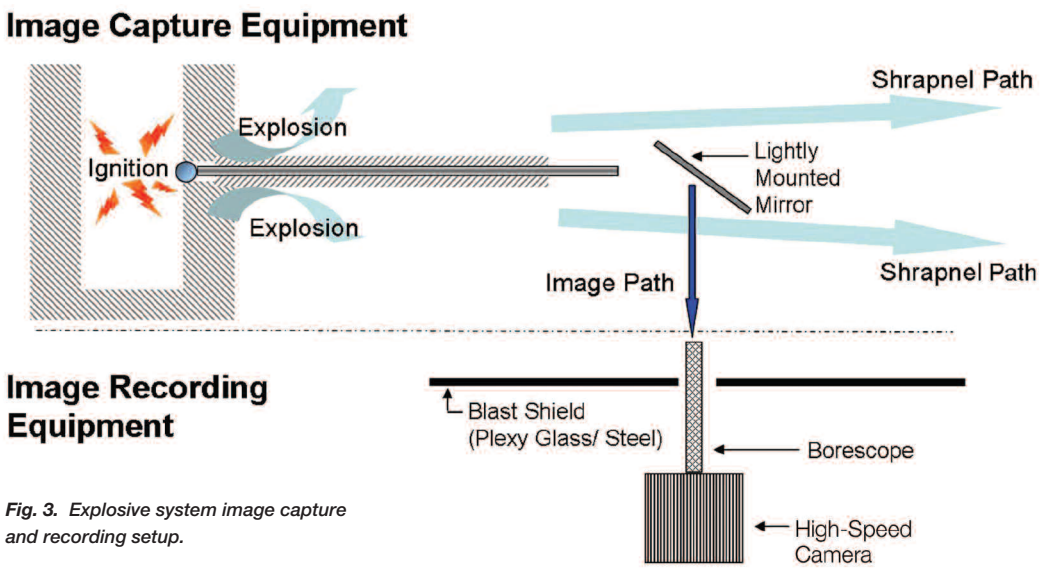

Fig. 3. Explosive system image capture and recording setup.

within a glass rod. The index of refraction varies as a function of the rod's radius, so focused images appear at distinct positions along the lens. The GRIN lens was suspended within a thick-walled, stainless-steel tube using small O-rings rolled onto the lens. The O-rings facilitated proper centering of the lens to the ball and allowed flexibility in positioning to achieve optimum image capture.

When designing a system for tests with particular risks, challenges, and image acquisition needs, variations to this configuration can be considered. A highly versatile viewing and imaging system can be achieved by similar design changes for testing in high-pressure systems, maximizing field of view, reducing image interference, and imaging in potentially explosive systems.

Low Leak Requirements at High Pressure

When sealing against high pressure and desiring low leak, a sapphire-to-metal seal is not sufficient; a good soft seal is needed. For example, WSTF has used sapphire ball supports made of PEEK (polyetheretherketone), Vespel SP 21, and Kel-F 81. In addition, increased torque – necessary when dealing with higher pressures – increases the risk of sapphire point-loading fracture. Designing systems with a sapphire ball footprint (figure 2) highly reduces the risk. Also, minimizing the area of the ball exposed to system pressure reduces the overall forces on the sapphire.

Maximizing Field of View

To maximize field of view, the amount of the ball lens diameter exposed into the system flow path should be maximized. If a quarter of the ball diameter protrudes into the system, maximum view can be achieved while still creating a good seal. With a relatively smaller portion of the ball diameter creating the seal, only a limited amount of torque can be applied before the ball is pushed through. This varies depending on materials used in the system. For example, a metal-to-sapphire seal can maximize the field of view for a transient pressure spike, but it may not hold high pressure.

Reducing Soot, Smoke, and Flame Image Interference

A common problem faced in ignition imaging is interference from soot and combustion byproducts. Although the interference cannot be completely eliminated, its effects can be minimized. For example, creating an intentional leak near the ignition event will vent combustion products away from the imaging area. Also, using long-wavelength (red) lasers can partially overcome image interference from smoke because the scattering of light is greatly diminished. For imaging mechanical processes, flame-bright light interference can be eliminated using narrow band pass filtration combined with red laser illumination.

Imaging with Potentially Explosive Systems

The goal when imaging potentially explosive systems is to preserve the higher-cost imaging equipment and sacrifice lower-cost equipment. In most cases, the image recording system (including camera, lenses, and specialized filters) is the largest investment, but the image capture system (including the sapphire ball and GRIN lenses) costs much less. Lightly mounted mirrors in the line of the imaging capture system can redirect the image 90 deg to the appropriate image recording system without transferring explosion shrapnel. In the example setup (figure 3), the sacrificial imaging system would blow out in a straight path, thus bypassing the expensive recording equipment. Image bending can also be achieved using a prism at the end of the GRIN lens. For further protection, a blast shield is placed between the image capture setup and the image recording equipment.