Mapping of Relative Temperatures in Flowing Gases

Rosella Sepulveda,
White Sands Test Facility, Johnson Space Center

Timothy D. Gallus,
White Sands Test Facility, Johnson Space Center

Several fires have occurred within scuba diver manifolds. While this phenomenon is not fully understood, White Sands Test Facility (WSTF) has been conducting tests to investigate how such fires can happen. Two theories – a vortex tube and a Jacob's ladder – were combined to develop a test apparatus with which relative temperatures of flowing gases can be mapped. This paper explains the test system development and the testing performed at WSTF, as well as the theory of full-field relative temperature mapping of flowing gases.

It is understood that a vortex tube is able to create temperature differences, and the application of a vortex tube operation should help predict the hot spots in a scuba manifold. To test this theory, it was necessary to develop a test system that measures relative temperature differences without disruption of gas flow. While a large thermocouple system can disrupt the flow to be studied, a delicate thermocouple system will cause little change to gas behavior; however, a delicate thermocouple is susceptible to damage by flowing gas and is inconvenient because of point readings. Thus, the combination of a Jacob's ladder with a vortex tube was considered.

A Jacob's ladder is composed of two conductors connected to an energized transformer. When connected, a potential voltage exists between the two conductors. If the transformer voltage is high enough, it overcomes the dielectric strength of the medium, and then an arc jumps between the two electrodes at the closest point at the bottom. The arc ionizes the air. The plasma created between the two electrodes rises, since the air between them has been superheated and the warm air rises. The arc continues to rise and stretch as it continues up the ladder until it reaches the top. There, the arc connection breaks because the gap between the electrodes becomes too large for the transformer voltage to overcome the dielectric strength of the air gap. At this point, the process is repeated at the bottom of the electrodes.

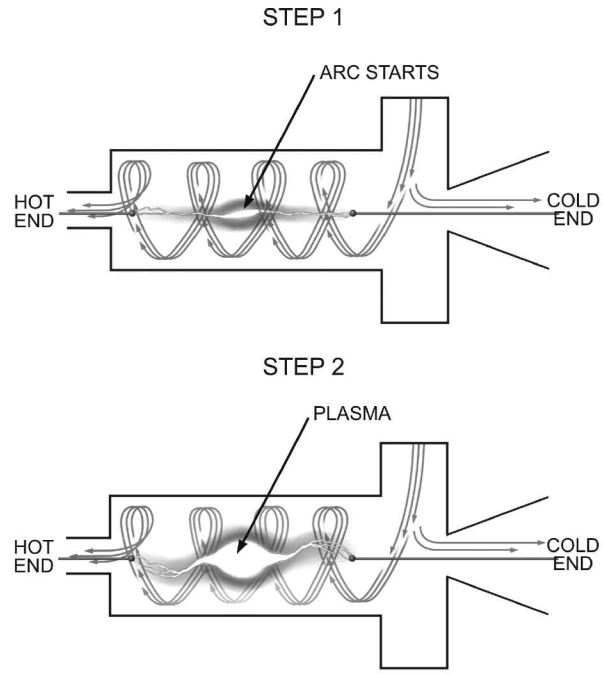

Fig. 1. *Configuration of testing apparatus.*

A vortex tube is a mechanical device with no moving parts, which separates ambient-temperature gas into a hot and a cold stream (figures 1 and 2). Pressurized gas is injected into a swirl chamber, and then the gas accelerates to a high rate of rotation (over 1,000,000 rpm). The gas splits into two streams, resulting in separate flows of hot and cold gases.

The foundation for developing our testing apparatus rested on understanding the combined application of a vortex tube and a Jacob's ladder. A commercial vortex tube was modified so that a section of metal wall from the spinning chamber to the hot end was replaced with a Pyrex tube. This modification allowed us to view the migration patterns of the plasma formed by the electric arc. Figure 1 – step 1 shows a vortex tube with an arc initiated down the axis of the tube. In the absence of spinning gas, this arc would naturally migrate to the top of the tube. If spinning gas is present when the arc is initiated, the centrifugal action

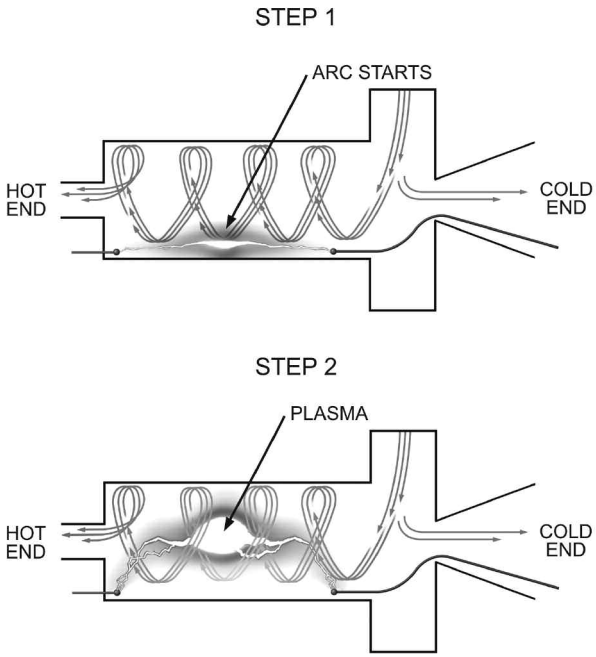

Fig. 2. *Initiation of the arc.*

overcomes gravity and keeps the arc confined to the axis of the tube (figure 1 – step 2). This result implies that a hot spot exists in the core of a functioning vortex tube. To confirm the hot core result, the electrodes were moved off-axis to the wall of the vortex tube. The arc was initiated while the gas was spinning, as shown in figure 2 – step 1. The superheated gas quickly migrated to the core, as shown in figure 2 – step 2. This confirmed that a functioning vortex tube contains a core of gas that is hotter than the periphery.

With the foundation understood, our testing apparatus was developed to simulate a scuba valve (figure 3). An observation window was created with a small sapphire ball lens directly below the valve seat to observe the development of the hot spots. Gas was flowed through the system at various rates and pressures. The conductor pair was inserted into the exit port. Next, gas flow was initiated and an insulated conductor pair was connected to a 200-watt 10-kV transformer to establish an arc. Hot spots were discovered just below the valve stem and in a small eddy at the inboard side of a turn in the exit port. Figure 3 shows how the flowing gas "pulls" the arc into pockets of hot gas just as a Jacobs's ladder arc follows the pockets of superheated gas.

This method can be used to predict hot zones in transient gas behavior as well as steady-state gas flow. A high-speed camera is needed when viewing transient effects, while an open shutter/detector integration method works best for steady-state mapping. The method has also been useful in computational fluid dynamics model development and validation.

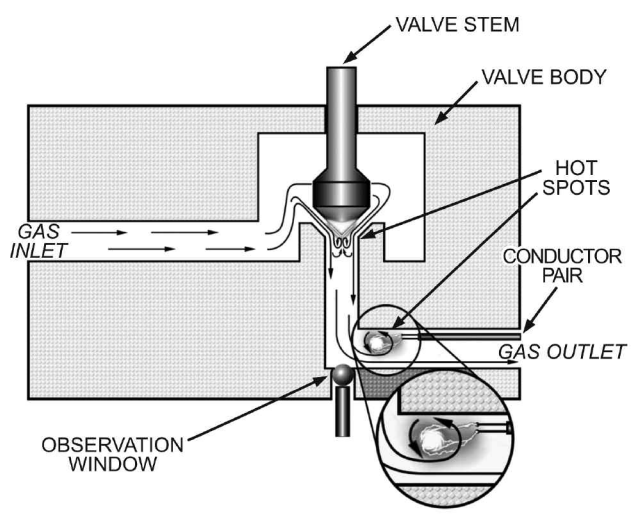

Fig. 3. *Flowing gas "pulls" the arc.*